AXOLIFT
by GROMET

OFFERING **SMART** AND **SAFE ALTERNATIVES** TO LADDERS





OFFERING **SMART** AND **SAFE**
ALTERNATIVES TO LADDERS

AXOLIFT® by GROMET

MANULIFT 200

Up to 4 meters in total safety

MANULIFT 200 platform is a full mechanical, versatile, robust and simple to use vertical mast platform, ideal for many applications - from construction to industries.

- Lightweight
- Completely manual
- Automatic stabilization
- Passes easily through standard doors
- Patented lifting mechanism* without power source
- Forkliftable

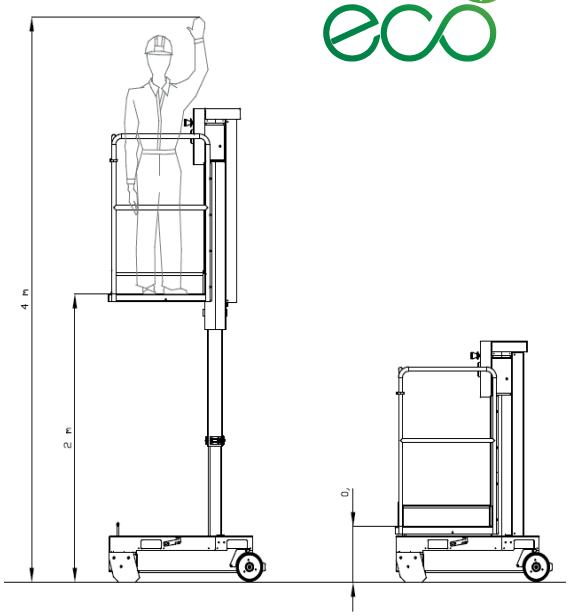

MANUAL MAST LIFT

- Without batteries
- No power consumption or need to be recharged
- Without CO2 emission or gas leakage
- Low cost maintenance
- Possible use 24h/24 7d/7

SAFETY

- Automatic breaking system
- Foot brake on rear wheel
- Saloon-door style entry gates
- Attachment point
- Emergency lowering system

TECHNICAL DATA



Dimension:
Max Working Height: 4,00 m
Max Platform Height: 2,00 m
Overall Width: 735 mm
Overall Length: 1180 mm
Stowed Height: 1670 mm
Work Platform: 740 x 645 mm
Ground clearance: 62 mm

Performance:
Platform Capacity SWL: 135 kg / 1 pers.
Tool Tray Capacity: 20 kg
Max Force To Be Exterted On The Handle: -5 daN
Allowable Cant: 0°- Internal Use
Max. Wind Speed: 0 km/h - Internal Use
High resistance paint Orange RAL 2000
Marking and Conformity CE- Compliance with the standard EN 280

Weight:
Gross Weight: 275 kg

www.axolift.com

AXOLIFT ® by Gromet Srl - Italy
Via dei Tulipani, 71/73 - 36061 Bassano del Grappa (VI)
Ph. +39 0424 580783 - info@axolift.com

OFFERING **SMART** AND **SAFE**
ALTERNATIVES TO LADDERS

AXOLIFT® by GROMET

MANULIFT 200/4

Up to 4 meters in total safety

MANULIFT 200/4 platform is a full mechanical, versatile, robust and simple to use vertical mast platform, ideal for many applications – from construction to industries.

- Lightweight
- Completely manual
- 4 wheels chassis
- Passes easily through standard doors
- Patented lifting mechanism* without power source
- Forkliftable

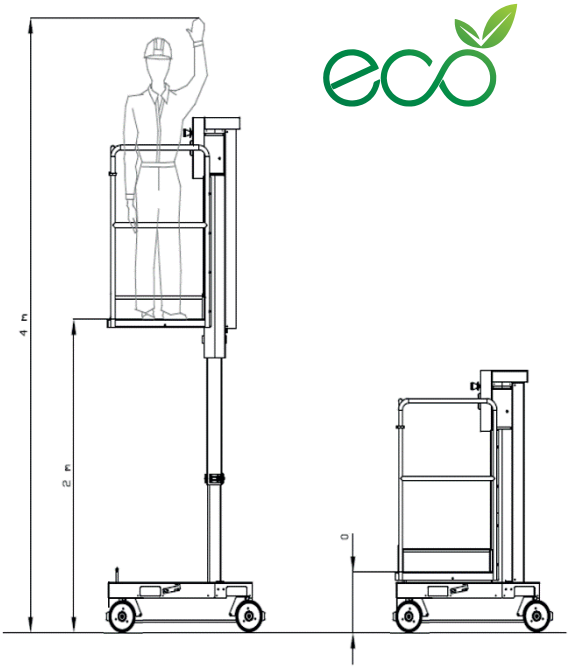

MANUAL MAST LIFT 4 WHEELS CHASSIS

- Without batteries
- No power consumption or need to be recharged
- Without CO2 emission or gas leakage
- Low cost maintenance
- Possible use 24 h/24 7d/7

SAFETY

- Emergency lowering system
- Foot brake bar on rear wheels
- Saloon-door style entry gates
- Attachment point

TECHNICAL DATA

Dimension:
Max Working Height: 4,00 m
Max Platform Height: 2,00 m
Overall Width: 735 mm
Overall Length: 1265 mm
Stowed Height: 1670 mm
Work Platform: 740 x 645 mm
Ground clearance: 62 mm

Performance:
Platform Capacity SWL: 135 kg / 1 pers.
Tool Tray Capacity: 20 kg
Max Force To Be Exterted On The Handle: -5 daN
Allowable Cant: 0°- Internal Use
Max. Wind Speed: 0 km/h - Internal Use
High resistance paint Orange RAL 2000
Marking and Conformity CE- Compliance with the standard EN 280

Weight:
Gross Weight: 273 kg



www.axolift.com

AXOLIFT ® by Gromet Srl - Italy
Via dei Tulipani, 71/73 - 36061 Bassano del Grappa (VI)
Ph. +39 0424 580783 - info@axolift.com

OFFERING **SMART** AND **SAFE**
ALTERNATIVES TO LADDERS

AXOLIFT® by GROMET

ELIFT 3.0

ELIFT 350 platform is a full electric, versatile, robust and simple to use vertical mast platform, ideal for many applications – from construction to industries.

- Hydraulically powered descent
- Integrated battery charger
- Easy to operate when lowered and raised
- Forkliftable
- Rubber protection around the base

SELF-PROPELLED MAST LIFT

- Full electric
- Zero emission and environmentally friendly
- Hydraulic oil collector in case of leakage
- Low cost maintenance
- Easy access to maintenance

SAFETY

- Saloon-door style entry gates
- Foot brake on rear wheels
- Tilt alarm
- Emergency lowering at chassis controls
- Automatic breaking system
- Attachment point

TECHNICAL DATA

Dimension

Max Working Height: 4,95 m
Max Platform Height: 2,95 m
Overall Width: 775 mm
Overall Length: 1230 mm
Stowed Height: 1765 mm
Work Platform: 890x645 mm
Ground Clearance: 35 mm

Performance

Platform Capacity SWL: 180kg / 1 pers.
Tool Tray Capacity: 20 kg
Raise/ Lower Time: 17 sec.
Allowable Cant: 0°- Internal Use
Max Wind Speed: 0 km/h - Internal Use
High resistance paint Orange RAL 2000
Marking and conformity CE Compliance with the standard EN 280

Power

Power Source: 24 Volt DC Battery
Charger: 24V - 11A

Weight

Gross Weight: 380 kg

Up to 4,95 meters in total safety



eco



www.axolift.com

AXOLIFT ® by Gromet Srl - Italy
Via dei Tulipani, 71/73 - 36061 Bassano del Grappa (VI)
Ph. +39 0424 580783 - info@axolift.com

OFFERING **SMART** AND **SAFE**
ALTERNATIVES TO LADDERS

AXOLIFT® by GROMET

P300

Up to 4,95 meters in total safety

P300 platform is a non-motorized push around scissor lift designed specifically for low-level access and can withstand the demands of everyday use on site while offering enhanced safety features. With its mini dimensions, light weight and its great stability the P300 platform is easy to move by one person only.

- Battery charger indicator
- Forklift pockets
- Easily passes through standard doorway
- Designed for tough site conditions



PUSH AROUND SMALL SCISSOR LIFT

- Environmentally friendly
- Without CO2 emission or gas leakage
- Low cost maintenance
- 8 hours continuous working

SAFETY

- Saloon-door style entry gates
- Foot brake on rear wheels
- Auto brake system
- Tilt sensor
- Emergency lowering system
- Overload alarm



TECHNICAL DATA

Dimension:
Max Working Height: 4,95 m | Max Platform Height: 2,95 m
Overall Width: 765 mm | Overall Length: 1273 mm
Stowed Height: 1760 mm
Work Platform: 631 x 1114 mm
Ground clearance: 50 mm

Performance:
Platform Capacity SWL: 240 kg / 1 pers.
Tool Tray Capacity: 20 kg
Raise/Lower Time: 15 sec
Allowable Cant: 0°- Internal Use
Max Wind Speed: 0 km/h - Internal Use
High resistance paint Orange RAL 2000
Marking and conformity CE
Compliance with the standard EN 280

Power
Power Source: 24 Volt DC Battery
Charger: 24V - 11A

Weight:
Gross Weight: 390 kg



www.axolift.com

AXOLIFT ® by Gromet Srl - Italy
Via dei Tulipani, 71/73 - 36061 Bassano del Grappa (VI)
Ph. +39 0424 580783 - info@axolift.com

OFFERING **SMART** AND **SAFE**
ALTERNATIVES TO LADDERS

AXOLIFT® by GROMET

P300T

Up to 4,95 meters in total safety

P300T platform is a self-propelled scissor lift designed specifically for low-level access and can withstand the demands of everyday use on site while offering enhanced safety features. With its mini dimensions, light weight and its great stability the P300T platform is easy to move by one person only.

- Battery charger indicator
- Forklift pockets
- Easily passes through standard doorway
- Designed for tough site conditions
- Interchangeable between push and self-propelled mode
- Can be driven on slopes of up to 35%



SELF-PROPELLED SMALL SCISSOR LIFT

- Environmentally friendly
- Without CO2 emission or gas leakage
- Low cost maintenance
- 8 hours continuous working

SAFETY

- Saloon- door style entry gates
- Foot brake on rear wheels
- Auto brake system
- Tilt sensor
- Emergency lowering system
- Overload alarm

TECHNICAL DATA

Dimension:
Max. Working Height: 4,95 m | Max. Platform Height: 2,95 m
Overall Width: 765 mm | Overall Length: 1273 mm
Stowed Height: 1776 mm
Work Platform: 631x 1114 mm
Ground Clearance: 50 mm

Performance:
Platform Capacity SWL: 240kg / 1 pers.
Tool Tray Capacity: 20 kg
Raise/ Lower Time: 15 sec
Allowable Cant: 0°- Internal Use
Max Wind Speed: 0 km/h - Internal Use
High resistance powdered paint Orange RAL 2000
Marking and conformity CE- Compliance with the standard EN 280

Power:
Power Source: 24 Volt DC Battery
Charger: 24V - 11A

Weight:
Gross Weight: 460 kg

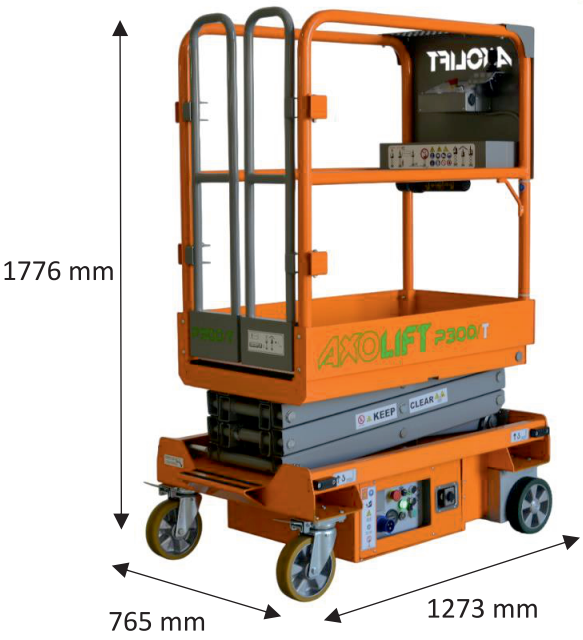

www.axolift.com

AXOLIFT ® by Gromet Srl - Italy
Via San Francesco, 10 - 36020 Pove del Grappa (VI)
Ph. +39 0424 580783 - info@axolift.com

ORGANISMO DI CERTIFICAZIONE
AZIENDA CERTIFICATA
ISO 3834:2021

UNI EN 1090-1:2009+A1:2011 CERT. N. 2716/CPR/0339

CERTIFICATION BODY
ISO 9001:2015

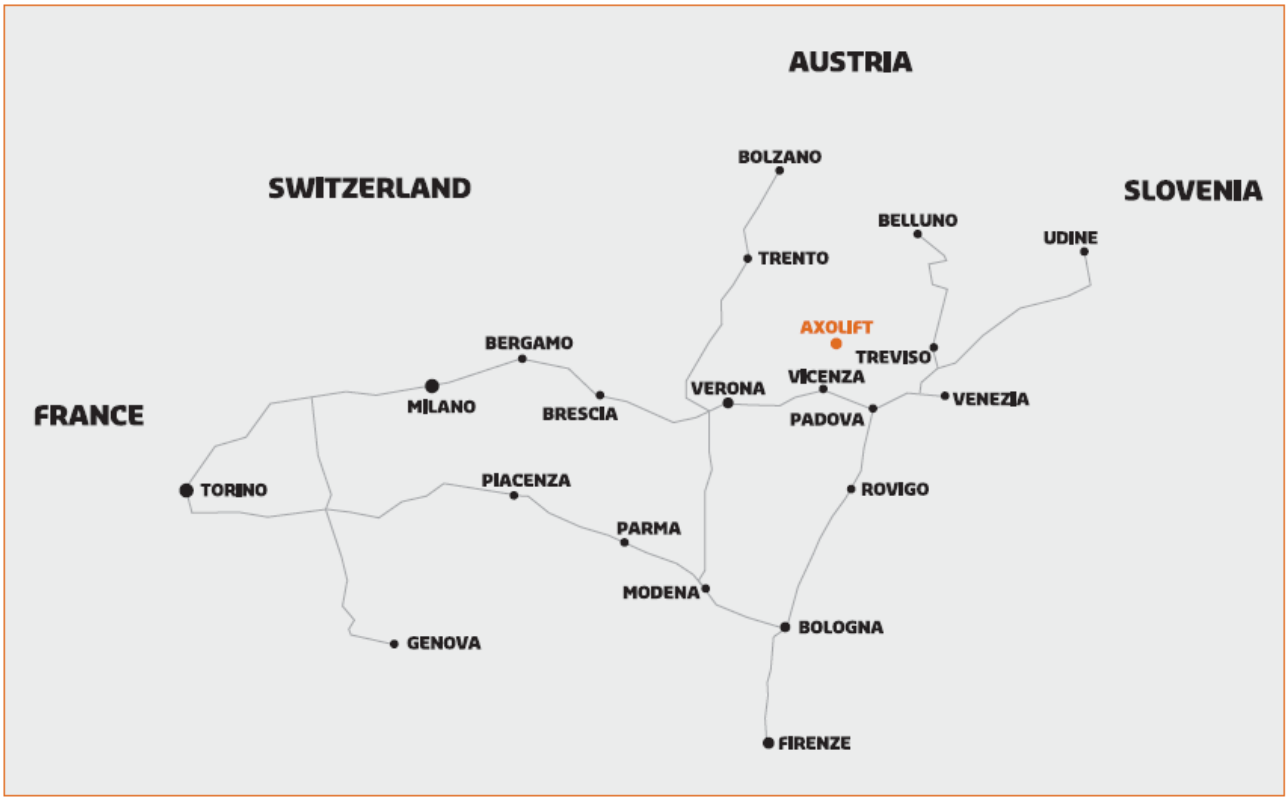

AXOLIFT by GROMET

By Gromet Srl
Via dei Tulipani 71-73, 36061 Bassano del Grappa, VI - Italy

Ph. +39 0424 580783
www.axolift.com – info@axolift.com